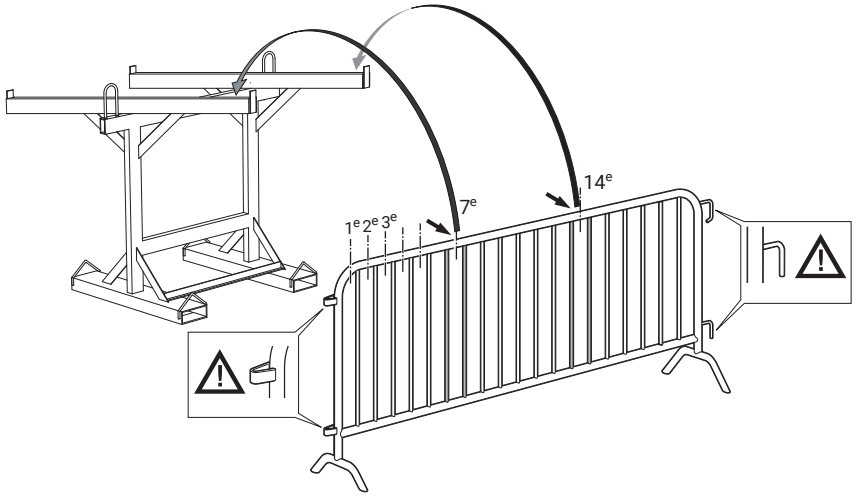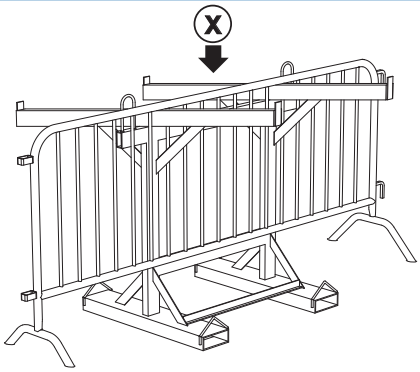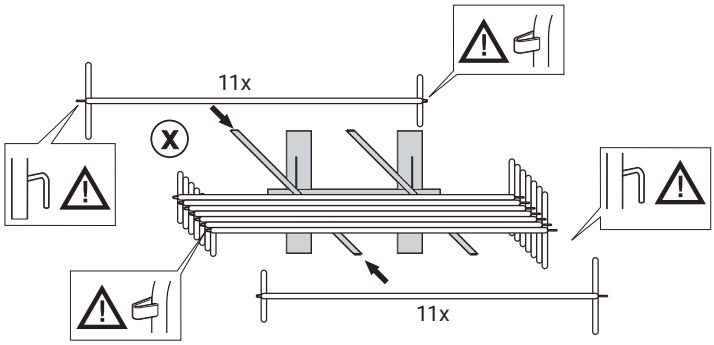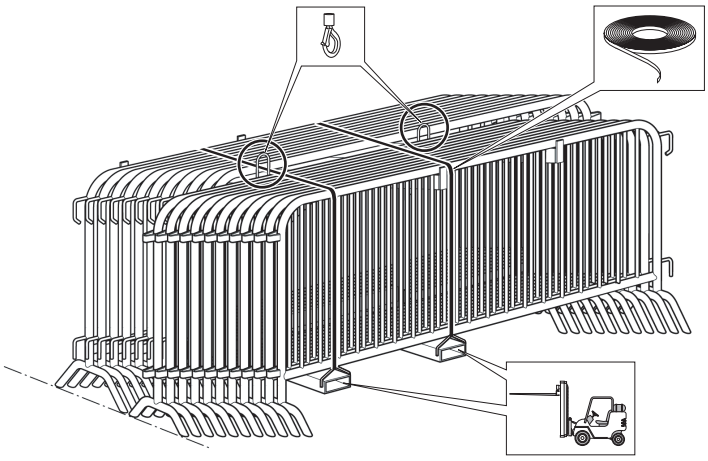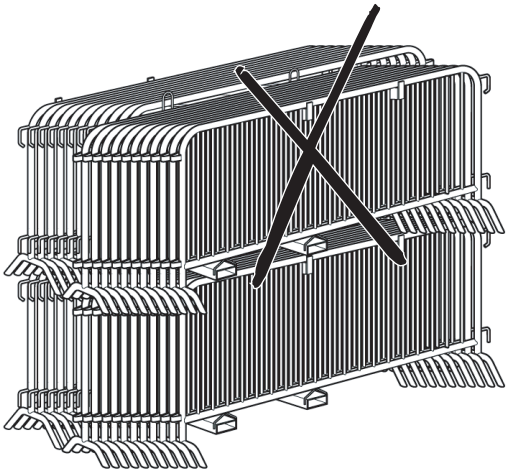Transport dranghek 19 spijls
Transport crush barrier 19 bars
Transport barrière de ville 19 barreaux
Transport Fan-Gitter 19 Stäbe